6th International Conference on Earthquake Geotechnical Engineering
1-4 November 2015
Christchurch, New Zealand

Remediation against Soil Liquefaction Induced Uplift of Manhole

Z. Zhang[1], S. C. Chian[2]

ABSTRACT

Underground structures such as manholes are susceptible to damage during a major earthquake. Due to their lower submerged unit weight as compared to the surrounding soil, uplift failure can occur in liquefied soil as observed in recent earthquakes such as the 2010 Christchurch Earthquake and the 2011 Tohoku Earthquake. Such significant manhole uplift can lead to breakages at the manhole-pipe connections which disrupt supplies of basic utilities to communities following the earthquake. Effective mitigation of damage to these lifelines would undoubtedly bring enormous benefits in the restoration of the area. Centrifuge experiments have been conducted to investigate a simple remediation technique against uplift of manholes. High permeability drain was installed at the base of the manhole to relieve high excess pore pressure. This was confirmed by the lower peak excess pore pressure measured at the remediated manhole as compared to the conventional manhole. The uplift of the manhole was also reduced significantly with the introduction of the permeable drain.

Introduction

Background

Earthquake induced soil liquefaction can cause significant damage to civil geotechnical infrastructure as evident in recent earthquakes at Christchurch and Tohoku in 2010 and 2011 respectively. Underground utilities such as manholes are vulnerable to medium and strong ground shaking. Uplift of manholes is one of the typical modes of failure observed in several major earthquakes. In Japan some mitigation measures against uplift for newly constructed manholes have been researched and implemented in practice, such as compacting backfill material (Kang et al. 2013), improving backfill material with cement mixed soil (Ishinabe et al. 1999; Yasuda et al. 2001) and using of soil-bags as backfill (Yoshida Masaho, 2006). However, many of these proposed methods often involve considerable effort to implement in the field.

Novel remediation against uplift of manhole

The essence of remedial measures taken to prevent manhole uplifting are to reduce the forces promoting the uplift (i.e. F_B and F_{EPP}) and increase the forces resisting the uplift (F_M and F_{SH}), where F_B is the buoyancy force acting on the manhole, F_{EPP} is the force due to excess water pressure underneath the manhole base due to liquefaction, F_M is the mass of the manhole, F_{SH} is the friction between the manhole wall and surrounding soil (Chian et al. 2014). Most of the

[1] Research Engineer, Dept of Civil & Environmental Engineering, National University of Singapore, Singapore, ceezhzh@nus.edu.sg
[2] Assistant Professor, Dept of Civil & Environmental Engineering, National University of Singapore, Singapore, sc.chian@nus.edu.sg

conventional mitigation measures adopted such as soil replacement or densification were aimed at decreasing the soil liquefaction susceptibility. Such measures need to be set up during the initial construction. Alternatively, the uplift force due to excess pore pressure beneath the manhole may be reduced. An approach to achieve this is to drill a permeable hole at the bottom of the manhole. In the event of a major earthquake, pore fluid beneath the manhole can dissipate into the chamber through this drilled hole. In this way, high excess pore pressure is relieved and the buoyancy of the manhole decreased due to the presence of discharged water in the chamber.

Centrifuge Modelling

Geotechnical centrifuge modeling is used to simulate dynamic and seismic events in many cases. The principle of geotechnical centrifuge modeling is to replicate similar stress condition as in the prototype scale (Schofield 1981). It provides the possibility and convenience to carry out parametric and failure mechanism studies under controlled laboratory conditions. The stress, strain, velocity, and fluid pressure in the prototype soil mass are preserved. In model scale, this is able to reproduce the same effective confining stress level as imposed in the prototype. The scaling laws used in dynamic centrifuge testing are summarized in Table 1. In this study, the geotechnical beam centrifuge at National University of Singapore (NUS) Centrifuge Lab was used. The centrifuge has an in-flight platform radius of approximately 2.0 m and a capacity of 40 g-tons. To investigate the uplift behavior of a manhole in liquefied ground, the sinusoidal earthquake shaking was applied at 25g centrifugal field. Uniform sinusoidal shaking was adopted to avoid complicating the study associated with different frequencies and amplitudes.

Table 1. Centrifuge scaling laws.

Parameter	**Model/Prototype**	**Dimensions**
Length	1/N	L
Acceleration	N	LT^{-2}
Velocity	1	LT^{-1}
Strain	1	1
Stress	1	$ML^{-1}T^{-2}$
Force	$1/N^2$	MLT^{-2}
Mass	$1/N^3$	M
Seepage Velocity	N	LT^{-1}
Time(Seepage)	$1/N^2$	T
Time(Dynamic)	1/N	T

Details of the model manhole and prototype

The manhole shown in Figure 1 is typically used in practice in Japan. It is mainly assembled by a cap, a skew wall and a vertical wall, and is placed onto the concrete foundation. In the centrifuge

tests, the model manhole used is made entirely of aluminum alloy (ρ=2.65g/cm^3), including a cap, a simplified cylindrical wall and a base as shown in Figure 2a. Table 2 shows the comparison of parameters between the model and the prototype. The dimensions of the model are illustrated in Figure 2a, roughly scaled down by 25 times as compared to the prototype. The manhole with remediation is shown in Figure 2b, where a permeable hole (Type 2 in Figure 2) was drilled at the bottom and the drainage outlet extended with a tube to the water table. The size of the hole was designed to ensure timely dissipation of excess pore water due to liquefaction. This remedial measure can be carried out in both existing and future manholes.

Table 2. Comparison of parameters of model and prototype

Parameter	**Prototype Scale**	**Required Model Scale**	**Actual Model Scale**
Length (mm)	2000	80	80
Diameter (mm)	1100	44	44
Mass (g)	1725×10^3	110.40	134.79
Volume (mm^3)	1.56×10^9	99.84	121.64
Density (kg/mm^3)	1.104×10^3	1.104×10^3	1.108×10^3

Note: Density of reinforced concrete is 2.4×10^3 kg/mm^3.

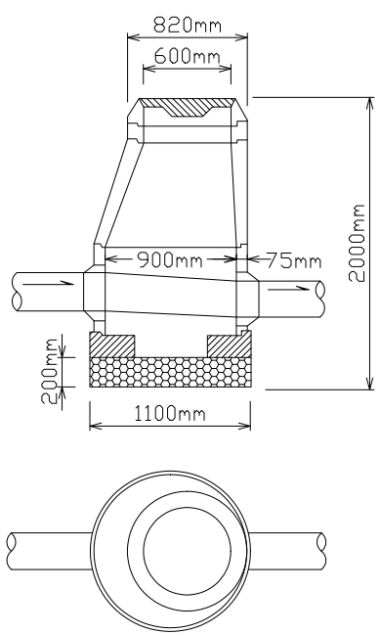

Figure 1. Prototype

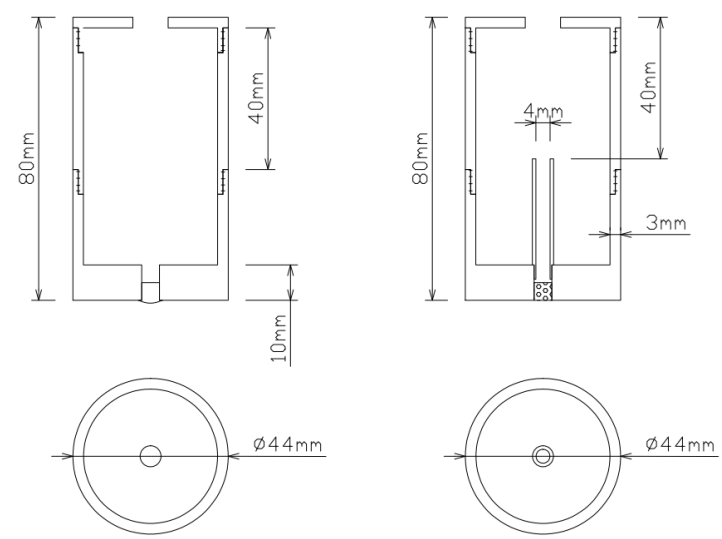

(a) Type 1 (b) Type 2

Figure 2. Model manholes

Sand properties model construction

The sand used in the tests is siliceous and derives from the Logan River in Australia. It is a uniformly graded sand with grain sizes ranging from 0.1 mm to 0.5 mm with properties ϕ=37°,

e_{max}=0.86 and e_{min}=0.49 (see Figure 3). In the centrifuge tests, the soil is treated as a continuum and hence sand particles are not scaled down. In this way, the soil also retains similar affinity to water retention and mineralogy of the soil in prototype.

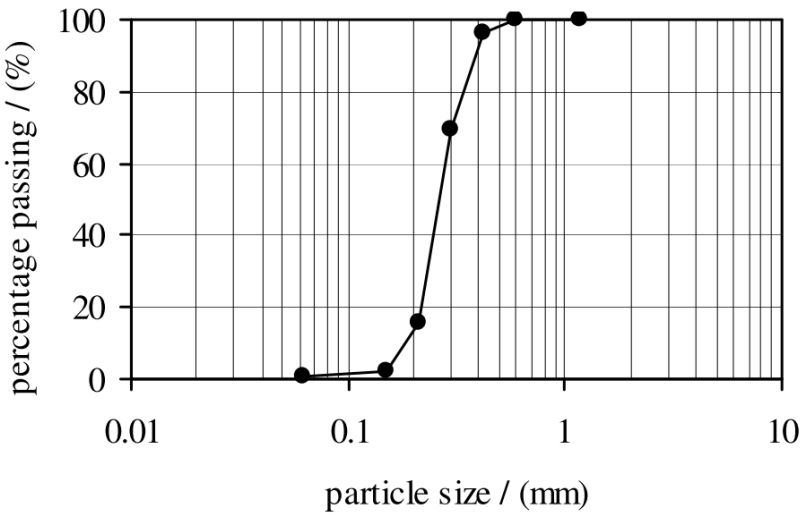

Figure 3. Partical size grading of model sand

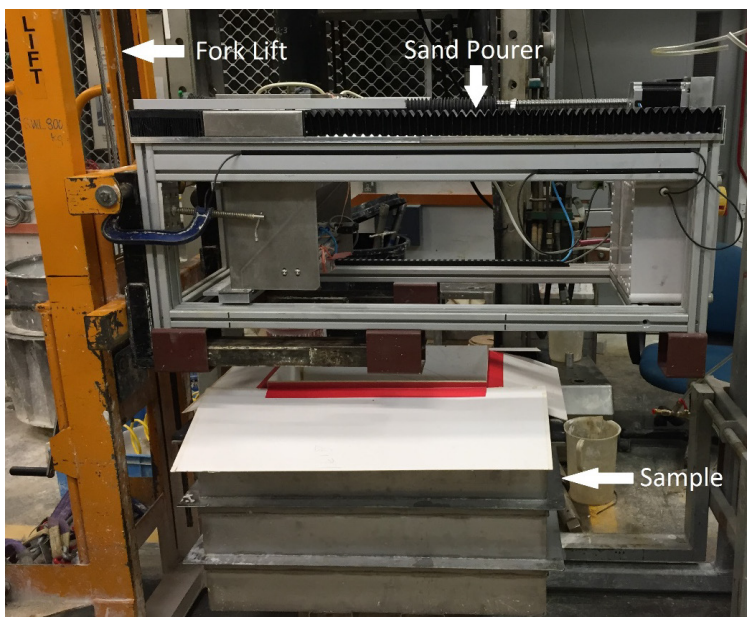

Figure 4. Semi-automatic sand pourer

The model was prepared in a laminar box, which has flexible boundary to allow the box to deform comparable to the soil. The box's inner dimension is 525mm (Length) ×300mm (Width) ×380mm (Height). A semi-automatic sand pourer, as shown in Figure 4, was used to enable a uniform pouring process using air pluviation method. It consists of an automatic horizontally travelling sand hopper that sits on a manual fork lifter. The sand hopper is driven by an electric motor which provides 16 travelling speeds. The height of sand fall can be manually adjusted during the pouring. Before the model preparation, the respective flow rate, travelling speed and

dropping height were calibrated to achieve the desired sand relative density, which was approximately 48% in the tests. Sand was poured beyond the target depth and then leveled with a vacuum cleaner before placement of the transducers at predetermined depths of the sand. The location of the accelerometers, pore pressure transducers and laser displacement transducers are shown in Figure 5. Laser displacement transducers were placed at the top of the two manholes and at the ground surface between the manholes in plan view.

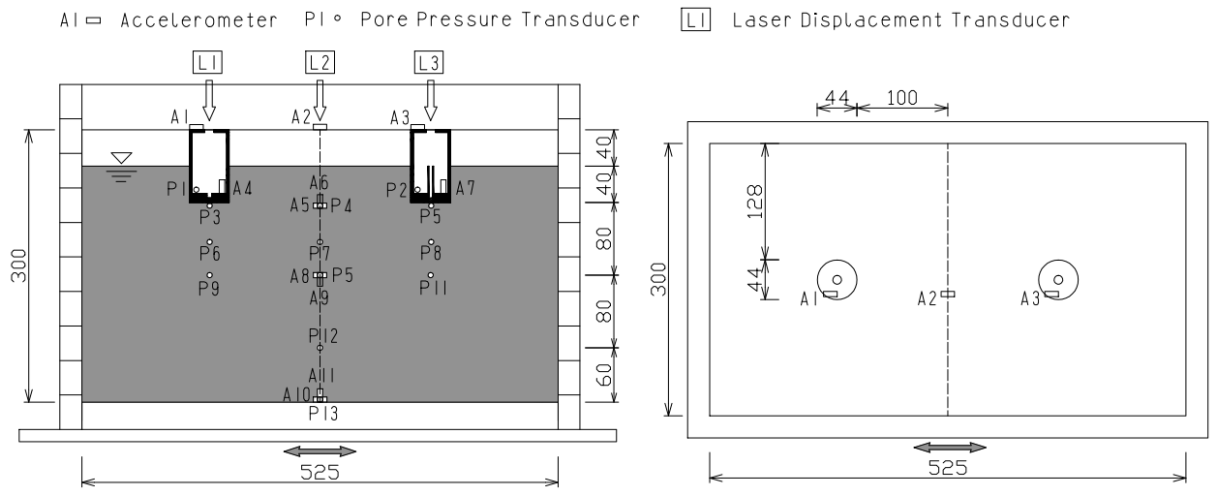

Figure 5. Layout of transducers and instruments

Preparation of the viscous fluid and Sample saturation

In the centrifuge tests, the sand models were saturated with a solution consisting of water and a biopolymer called KELCO-CRETE, which is a viscosity agent (VMA). These models were saturated from the base of the container under vacuum so as to minimize presence of air voids in the soil. The viscosity of water at 25 degrees Celsius is 0.89cP (Kestin, 1978). Hence, the target viscosity of the solution used in the tests should be 0.89 × 25 = 22.3cP for the purpose of satisfying the scaling between seepage time and dynamic time. The temperature of the centrifuge room was regulated at 25°C by a thermostat. During the saturated process, the hydraulic gradient in the tube were controlled to avoid high flow rate that would disturb the sand model. The maximum flow rate set in the tests was 0.28ml/s, computed from Darcy's law (Stringer and Madabhushi, 2009). Once water was observed above the sand surface of the model, the saturation process was ceased and the excess water above the sand surface was removed. The last 40cm layer of dry sand was subsequently added via the pluviation method to complete the model preparation.

Test Results

Manhole uplift

Centrifuge test was conducted to investigate the behavior of manholes of prototype diameter of 1.1m buried at a depth of 2m with remediation and without remediation. During the earthquake shaking, the increase of excess pore water pressure is one of the most important factors leading to manholes' uplift (Koseki et al. 1997a, b; Yasuda and Kiku 2006). In the test, the drainage hole

at the manhole base allowed pore water pressures exceeding hydrostatic pressure to flow into the chamber. This is translated to a reduction in manhole uplift as shown in Figure 6. The untreated manhole suffered an uplift of 0.25m, whereas manhole with drain countermeasure lifted only by 0.1 m.

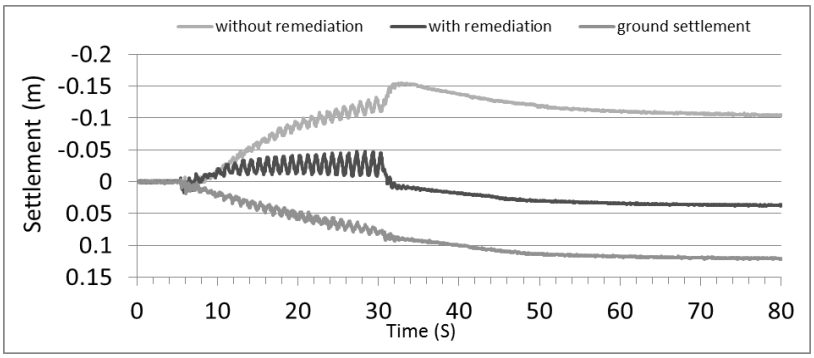

Figure 6. Displacement of manhole and ground measured with laser displacement sensors

Acceleration

Figure 7 shows the horizontal acceleration measured at different soil depth and manholes. As observed, the acceleration amplitudes were similar at the early half of the first shaking cycle. However, it reduced significantly reaching less than 1 m/s^2 at the top of the sand model after the first shaking cycle due to sand liquefaction. In addition, the horizontal acceleration amplitude of the untreated manhole (A1) was larger than the manhole with remediation (A3) during shaking as shown in Figure 8.

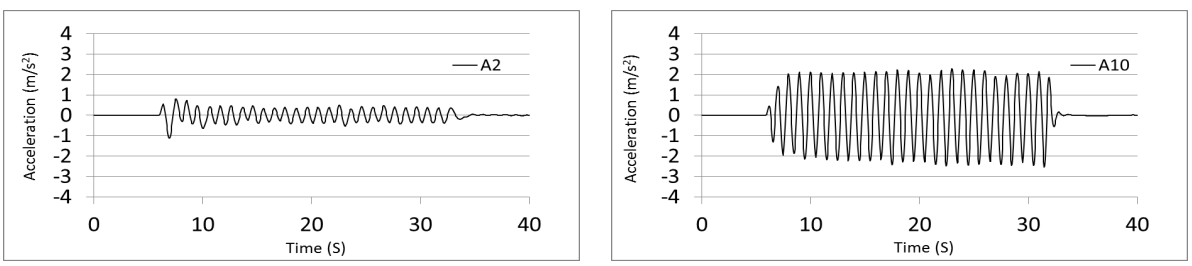

(a) Sand surface (b) Sample bottom

Figure 7. Horizontal acceleration measurements in the soil

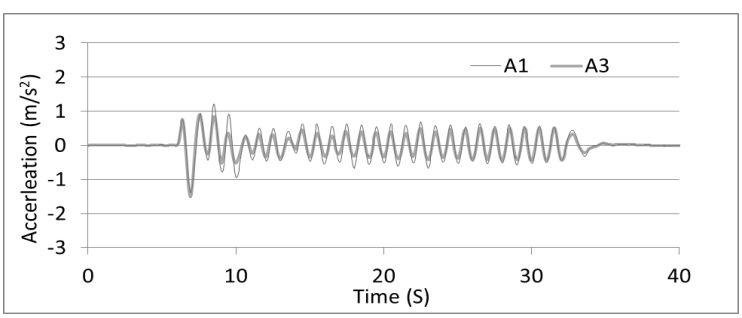

Figure 8. Comparison of horizontal accelerations on manholes

Pore pressure buildup and dissipation

Figure 9 shows the pore pressure changes beneath those manholes. P3 and P5 refer to the excess pore pressure measurement near the base of the untreated and remediated manholes respectively. During the early stage of shaking, similar excess pore pressure was measured at the bottom of both manholes. After shaking, excess pore pressure dissipation is quicker for the remediated manhole as high pore pressure under the drainage hole can continue to be dissipated into the manhole chamber. This was confirmed with the large amount of water residing in the manhole after the test as shown in Figure 10.

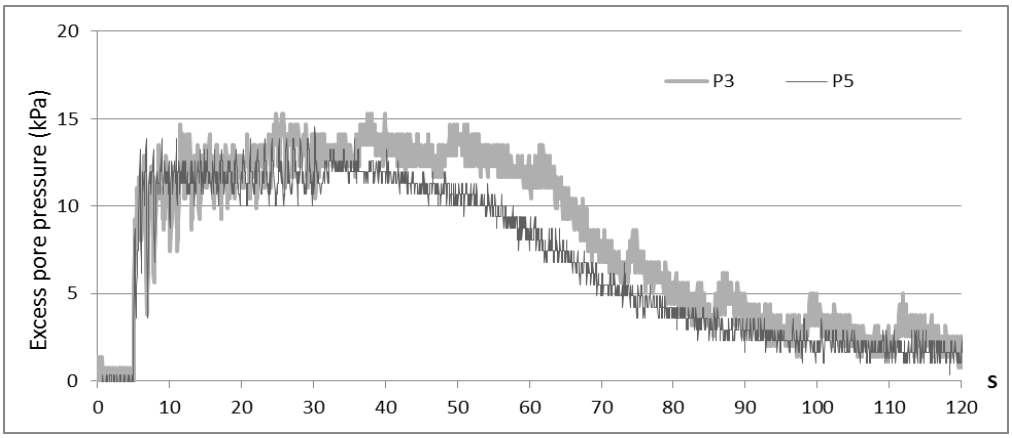

Figure 9. Pore pressure at base of manholes

Figure 10. Residual fluid in the manhole chamber

Taking that the absolute uplift (ignoring post-shaking settlement) of manhole occurs mainly during the shaking (Chian et al. 2014), similar excess pore pressure measurements (P3 and P5 in Figure 9) at the bottom of both manholes would indicate that the uplift force due to excess pore pressure (F_{EPP}) were similar. The mass of the manhole (F_M) is a constant. Hence, the difference in uplift must be due to the other two components: the buoyancy force based on Archimedes Principle (F_B) and the shear resistance at the manhole-soil interface (F_{SH}).

During manhole retrieval by hand after the test, the friction at the manhole-soil interface was higher for the remediated manhole as compared to the untreated manhole. This could infer that a thin water film has permeated in between the manhole and soil contact surfaces. Therefore, with

the pressured water flowing into the manhole chamber through the drainage hole, it not only decreased the buoyancy (F_B), but could also have avoided the loss of interface friction (F_{SH}) due to water permeation. In the case of the untreated manhole, pore fluid accumulating at the manhole base was more inclined to travel along the manhole side wall upwards to the soil surface as the shortest and easiest path, hence leading to a potential loss of interface friction between the manhole and soil. As a result of a lower F_B and a higher F_{SH} for the remediated manhole, it is evident that its uplift displacement would be lower than that of a conventional untreated manhole.

CONCLUSIONS

In this study, a new remediation measure against manhole uplift was studied with centrifuge testing. The mitigation using a drain opening at the base of the manhole was proven to be effective in reducing the uplift in the event of soil liquefaction. This is attributed to the lowering of buoyancy force as water was drained into the chamber. Shear resistance at the manhole-soil interface was also retained, unlike the untreated manhole which was subjected to water permeation into the manhole-soil interface. Results also showed that the adoption of such countermeasure can reduce the manhole's horizontal acceleration.

REFERENCES

Chian, S. C., Tokimatsu, K. and Madabhushi, S. P. G. Soil Liquefaction–Induced Uplift of Underground Structures: Physical and Numerical Modeling. *Journal of Geotechnical and Geoenvironmental Engineering* 2014; **140**(10):04014057.

Ishinabe, H., Yashuda, S., Murasawa, Y., Takanami, K. and Kobayshi, T. A study on liquefacts strength cement deep mixing soil reinforced with fiber. *Proceedings of the 54th Annual Conference of the Japan Society of Civil Engineers* 1999; 498-499.

Kestin, J., Sokolov, M. and Wakeham, W. A. Viscosity of liquid water in the range -8C^o to 150C^o. *J. Phys. Chem. Data*, Vol. **7**, No. 3, 1978.

Kang, G.-C., Iai, S., Ge, L. and Tobita, T. Centrifuge Modeling and Mitigation of Manhole Uplift due to Liquefaction. *Journal of Geotechnical and Geoenvironmental Engineering* 2013; **139**(3):458-469.

Koseki, J., Matsuo, O. and Koga, Y. Uplift behavior of underground structures caused by liquefaction of surrounding soil during earthquake. *Soils Found* 1997; **37**(1), 97–108.

Koseki, J., Matsuo, O. Ninomiya, Y., and Yoshida, T. Uplift of sewer manhole during the 1993 Kushiro-Oki earthquake. *Soils Found* 1997; **37**(1), 109–121.

Schofield, A. N. Dynamic and earthquake geotechnical centrifuge modeling. Proceedings of the *International Conference on Recent Advances in Geotechnical Earthquake Engineering and Soil Dynamics* 1981, Vol. 3, Univ. of Missouri, Rolla, MO, 1081–1100.

Stringer, M. E. Madabhushi, S. P. G. Novel Computer-Controlled Saturation of Dynamic Centrifuge Models Using High Viscosity Fluids. *Geotechnical Testing Journal* 2009; **32**(6):559-564.

Yasuda, S., Ishinabe, H. and Murasawa, Y. Static and dynamic strength of cement mixed soil reinforced by fibers. *Proceeding of the International Symposium on Earth Reinforcement* 2001; 171-176

Yasuda, S. and Kiku, H. Uplift of sewage manholes and pipes during the 2004 Niigataken-Chuetsu earthquake. *Soils Found* 2006; **46**(6):885–894.

Yoshida, M., Miyajima, M. and Masaru Kitaura, M. Experimental study on countermeasure against liquefaction-induced flotation of manhole using recycled materials packed in sandbags. *Global Geology* 2006; **9**(2):150-155.